Ordering Code

WLCA – PS - 025 - _ _ _ _ - _ _ - _ _ _ _ - _ _ _ - _ _ _

1	2	3	4	5	6	7	8
Model	Drive Unit	Size	Stroke	Pitch	Mounting Kit Model	Mounting Kit Assembly	Assembly Accessories

1 - Model - **WLCA-025 :** Series Compact Actuator

2- Drive Unit - ***PS*** **: Precision Screw**

3- Size - ***: 025***



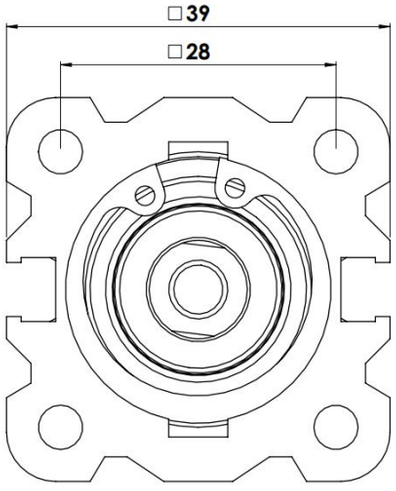

WLCA - _ _ - 025

Size	25
Pitch [mm/rev]	10
Max. Payload Horizontal [kg]	40
Max. Payload Vertical [kg]	20
Max. Feed Force Fx [N]	300
Max. Speed [mm/s]	120
Max. Acceleration [m/s²]	8
Repetition Accuracy[mm]	±0,02
Position Sensing	Magnetic Sensor
Basic Weight 0 mm Stroke [kg]	0,75
Additional Weight Per 100 mm Stroke [kg]	0,22
Mass Moment of Inertia J_0 With 0 mm Stroke [kgmm²]	5,10
Mass Moment of Inertia J_S Per Meter Stroke [kgmm²/m]	3,10
Mass Moment of Inertia J_L Per Kg Payload [kgmm²/m]	0,60

4 - Stroke

0000 **: Maximum 250 mm**

Size	Standart Strokes				
025	0050	0100	0150	0200	0250

Movement Stroke

In addition to the desired movement stroke, it is recommended to leave a space on both sides until 2xPitch.

Sm = Se + 2.Ss
Ss = 2.p

Sm : Movement Stroke

Se : Safety Stroke

p : Precision Screw Pitch

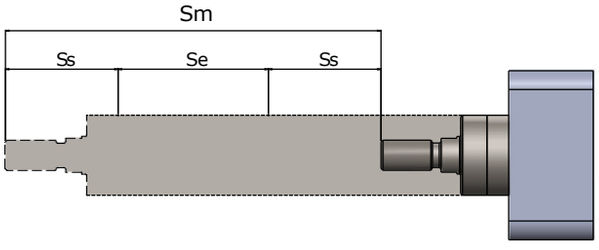

5-Pitch

Drive Unit	Precision Screw		
Actuator Model	5	10	16
WLCA - _ _ - 025	-	+	-

6 - Mounting Kit Model

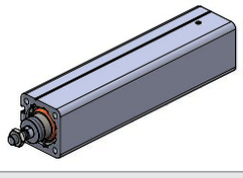

00 : Without Mounting

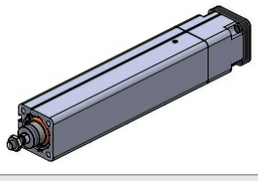

WDAK :Axial Kit

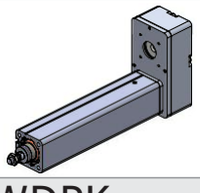

WDPK :Parallel Kit

Note 1 : Please contact for different motor types and mounting sizes.
Note 2 : Please contact for to use reducer.

7 - Mounting Kit Assembly

00 : Without Motor

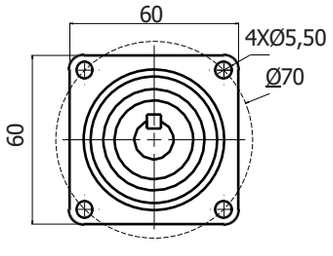

070 : Ø70 motor mounting

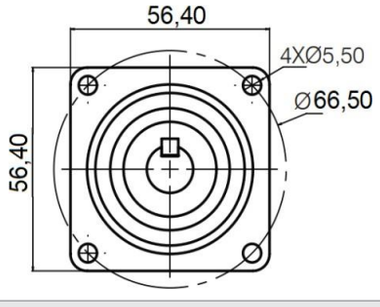

023 : Nema 23 motor mounting

8- Assembly Accessories

... - WKA



... - WGM



Technical Drawing

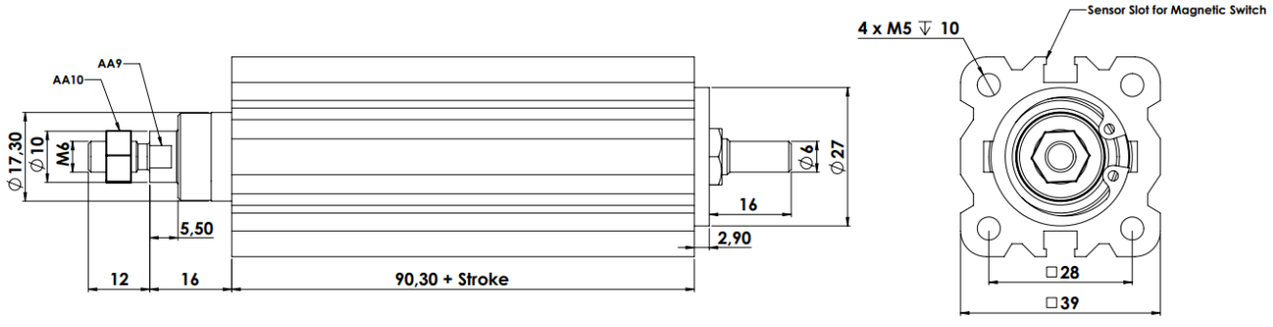

Max. permissible loads on the piston rod

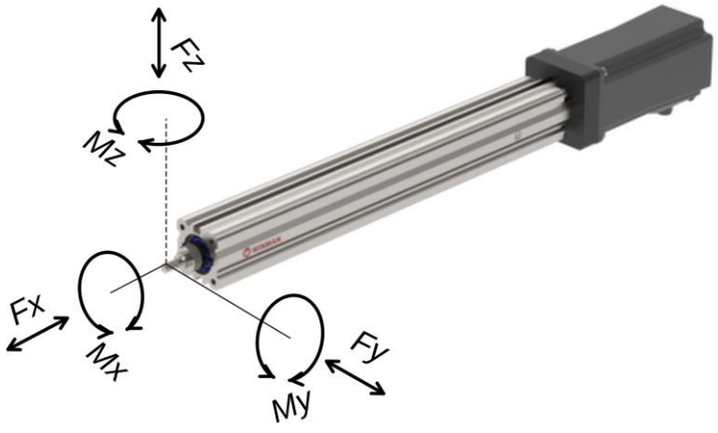

WLCA	Max. feed force Fx	Max. moment Mx	Max. moment My	Max. moment Mz
WLCAØ25	300 N	0 Nm	0,6 Nm	0,6 Nm

Assembly

WLCA-025 Compact Actuator

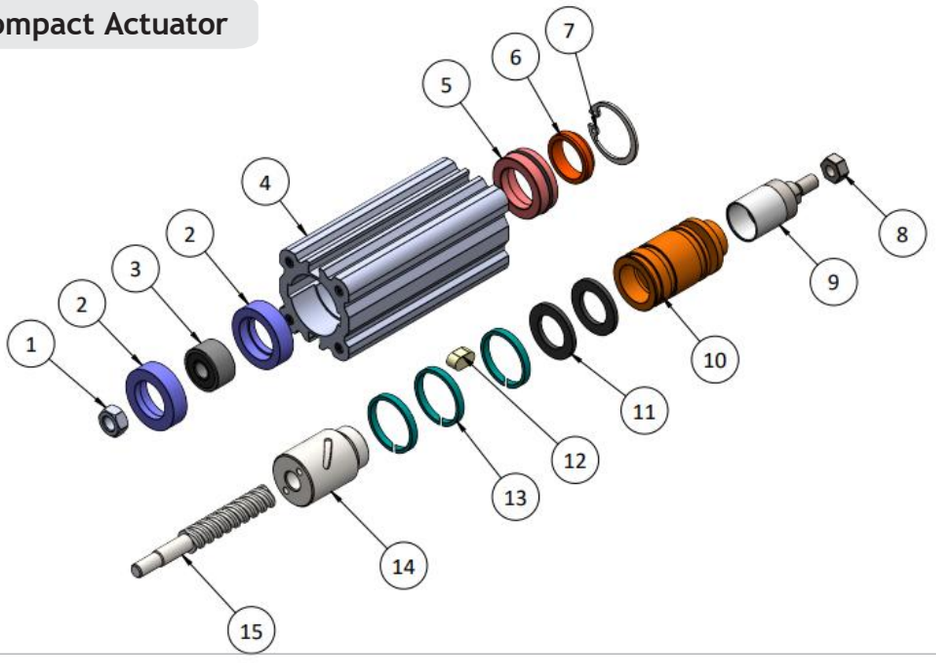

WDPK Parallel Kit

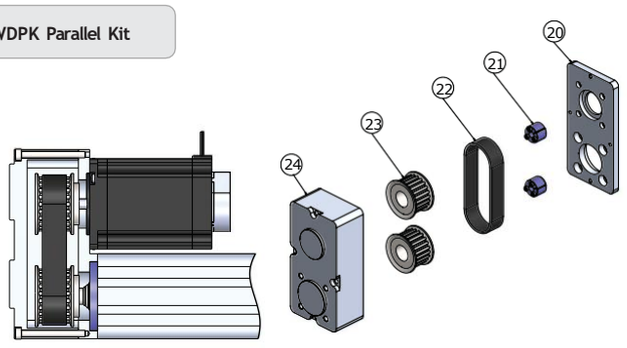

WDAK Axial Kit

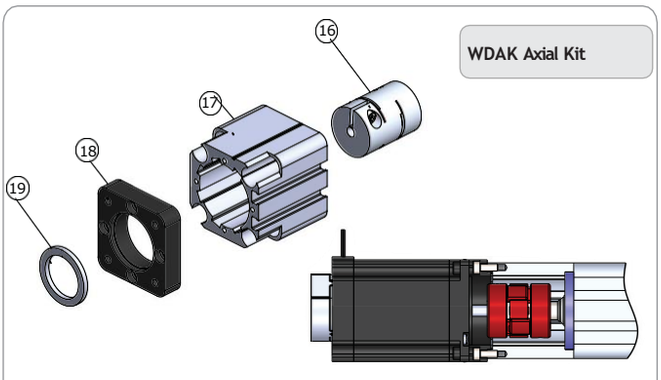

Piece	Qty	Part Name	Assembly
1	1	Bearing Fixing Nut	Actuator
2	2	Bearing Fixing Ring	
3	1	Bearing	
4	1	Profile	
5	1	Front Block	
6	1	Bearing Bush	
7	1	Piston Ring	
8	1	Connection Nut	
9	1	Connection Nipple	
10	1	Piston	
11	1	Magnetic	
12	2	Anti-Rotation Key	
13	2	Guide Ring	
14	1	Ball Nut	
15	1	Precision Screw	Axial Mounting
16	1	Coupling	
17	1	Bellhousing	
18	1	Bellhousing Flange	
19	1	Motor Flange	Parallel Mounting
20	2	Parallel Kit Cover	
21	1	Taper Bushing	
22	2	Toothed Belt	
23	1	Timing Belt Pulleys	
24	1	Parallel Kit Box	